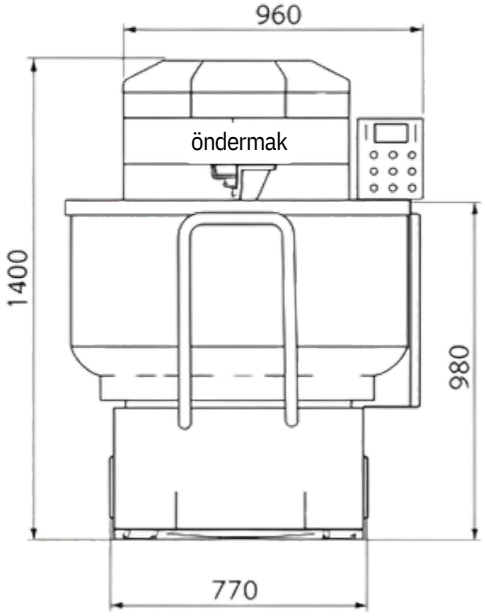

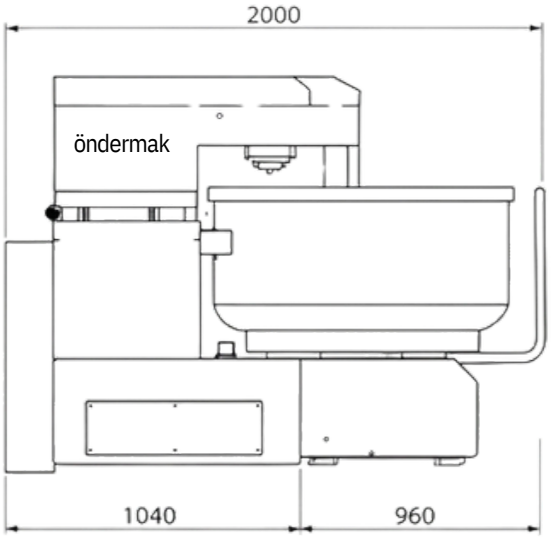

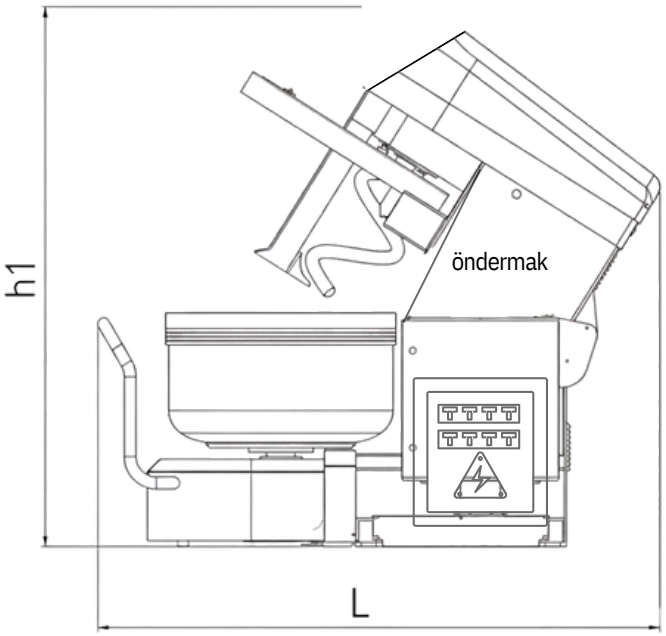

ÖNDERmak®
Eskişehir
Hamur İşleme Ekipmanları Ve Fırınlar
Bakery Equipment & Ovens

TOLERANCE	UPDATE	Date
%1,00 +/-	2025	01.01.2020

notes

Material	DIN
KG	N/A
Scale:	A4

Model Name :

MOBIMIX REMOVABLE BOWL

Model Nr.

CAD | by ondermak - size and dimension scan be changed by producer